KHM 2x400 PS

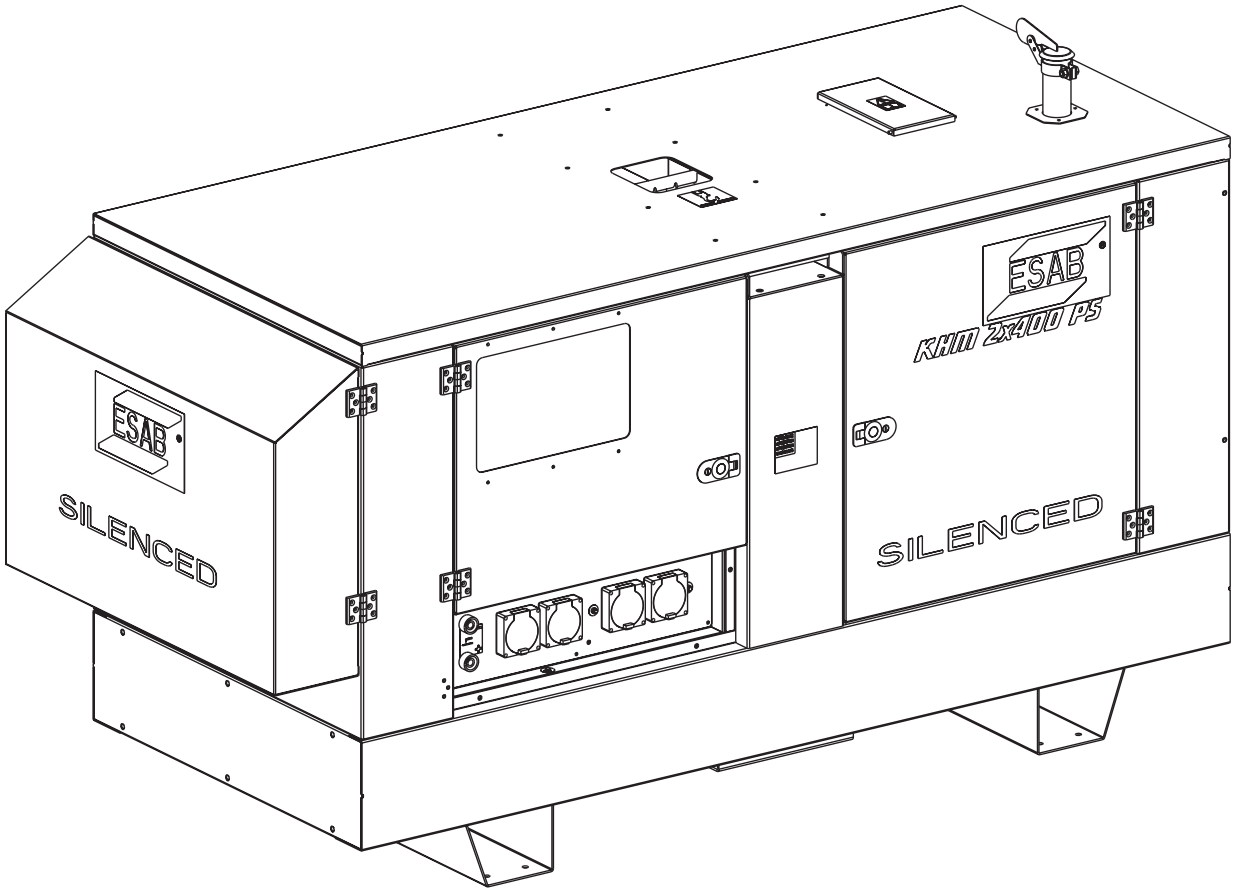

Service manual

0794 999 941 05/02

Valid for serial No. 504 - XXX - XXXX

TABLE OF CONTENTS

READ THIS FIRST

This service manual is intended for use by technicians with electrical/electronic traning, for help in connection with fault-tracing and/or repair.

Use the wiring diagram on pages M 61.1-2-3-4-5-6, 60 and the description of operation on pages SM 3 when fault-tracing.

A brief user guide is included on page M 2, 2.1, 2.5, 2.5.1, 4.2, 6.8, 2.6, 2.7, 3, 20, 21.3, 22.1, 31, 32, 33..., 35, 38.9, 43, 43.3, 44.2, 45..., 51, 52, 53 to assist understanding how the machine is used.

The manuals contains details of all design modifications up to and including Feb 2005.

⚠ WARNING

ARC WELDING AND CUTTING CAN BE INJURIOUS TO YOURSELF AND OTHERS. TAKE PRECAUTIONS WHEN WELDING. ASK FOR YOUR EMPLOYER'S SAFETY PRACTICES WHICH SHOULD BE BASED ON MANUFACTURES' HAZARD DATA.

ELECTRIC SHOCK – Can kill
- Install and earth the welding unit in accordance with applicable standards.
- Do not touch live electrical parts or electrodes with bare skin, wet gloves or wet clothing.
- Insulate yourself from earth and the workpiece.
- Ensure your working stance is safe.

FUMES AND GASES – Can be dangerous to health
- Keep your head out of the fumes.
- Use ventilation, extraction at the arc, or both, to keep fumes and gases from your breathing zone and the general area.

ARC RAYS – Can injure eyes and burn skin
- Protect your eyes and body. Use the correct welding screen and filter lens and wear protective clothing.
- Protect bystanders with suitable screens or curtains.

FIRE HAZARD
- Sparks (spatter) can cause fire. Make sure therefore that there are no inflammable materials nearby.

NOISE– Excessive noise can damage hearing
- Protect your ears. Use ear defenders or other hearing protection.
- Warm bystanders of the risk.

MALFUNCTION – Call for expert assistance in the event of malfunction.

READ AND UNDERSTAND THE INSTRUCTION MANUAL BEFORE INSTALLING OR OPERATING.

PROTECT YOURSELF AND OTHERS !

⚠ WARNING

This product is intended for industrial use. In a domestic environment this product may cause radio interference. It is the user's responsibility to take adeguate precaution.

02/11/04 78401-GB

WELDING PROBLEM	POSSIBLE CAUSE	WHAT TO DO
P1 All functions performed by the WDC are regular, but there is no tension on the welding sockets	1) Position of regulation potentiometer incorrect knob	1) Adjust the position of the WDC regulation knob on the potentiometer spindle so that the potentiometer is not completely at the end of its travel when the knob reaches its minimum position. Idem for the RC1 remote control knob.
P2 Malfunction in the selection of welding processes or in their confirmation on other functions performed by the WDC	1) WDC defective	1) ***Replace*** the WDC.
P3 Blinking "ON" LED	1) Current sensor connector P3 2) Aux power voltage value (±15V) too high or too low	1) Connector P3 not inserted or defective - see drawing 5 2) Check the aux trasformer, see drawing 1
P4 Blinking red LED	1) The chopper thermic protection is intervening 2) Temperature sensor situated on chopper (NTC resistor) short circuited or open. 3) WDC defective	1) The output is inhibited automatically; let the motor continue to run to cool down the chopper, and after a few minutes the LED will automatically switch off and there will be current/ voltage once again at the welding sockets. 2) Check chopper connector, drawing 2, from pin 13-14. The resistor must be bigger than 1800 Ω and less than 25 KΩ, otherwise the led blinking. ***Replace*** the chopper. In the meantime you can work cutting the wire which arrives to pin 13 - pin 14 and put on it one resistor 10 KΩ In this case the thermic protection don't work but you can use the machine. 3) ***Replace*** the WDC.
P5 Red LED always on	1) WDC defective 2) Chopper defective 3) Current sensor defective	1) ***Switch off*** the machine and start it up again; if the LED remains off try to weld, verifying that the welding is regular; if the LED lights up again. Replace the WDC. 2) Check the chopper as shown on drawing 2. 3) Replace the sensor.
P6 PHG1 remote does not operate.	1) Remote control (or cable) defective. 2) WDC defective.	1) Check the remote control as drawing 4 2) ***Replace*** the WDC
P7 The welding current is always at max or always at minimum	1) Potentiometer on WDC defective 2) WDC defective 3) Welding current sensor defective	1) Check from pin 1-12 connector P4 (pin 1 - ground see drawing 3) 2) Replace the WDC 3) Replace the current sensor
P8 No voltage at the welding sockets in CV mode	1) Defective wire feeder cable 2) Defective wire feeder 3) Defective WDC	1) Check the connections pin to pin of the wire 2) Check the wire feeder 3) Without wire feeder cable put the pin I in circuit with G on remote control connector, the led ON must be light - WDC ok otherwise change WDC
P8 No welding or generation output	1) Short circuit of chopper. 2) Short circuit of generation unit. 3) Alternator defective.	1) ***Disconnect*** the chopper and re-start the machine; if there is now an output present, replace the chopper 2) ***Disconnect*** the auxiliary output circuit and re-start the machine; if there is now an output present, there is a short circuit in the auxiliary output circuit or in one of the components 3) ***Disconnect*** all outputs on the alternator (welding and generation unless the output going to the condensers) and

PROBLEMS	POSSIBLE CAUSE	WHAT TO DO
		check the capacity of the condensers. Restart the machine, if there is still no output, replace the alternator.
WELDING WITH V.R.D.		
P9 The welding tension after 3 sec isn't less enough (plus in 12V dc)	1) Net R.C. defective or disconnected from + or - welding socket 2) WDC defective.	1) Check the net R.C. Check the connections. 2) ***Replace*** the WDC.
GENERETING PROBLEMS		
P1 Voltmeter shows no voltage or low voltage but actual voltage at the sockets is OK.	1) Voltmeter malfunction	1) ***Replace*** the voltmeter.
P2 No three-phase voltage present at the socket(s).	1) Differential switch not inserted 2) Differential switch malfunction	1) ***Turn on*** the switch. 2) ***Replace*** the switch.
P3 No single phase voltage one socket but voltmeter reading is normal and there is voltage on the other sockets.	1) Intervention of thermal switch due to excessive current. 2) Thermal switch malfunction.	1) ***Push in*** the thermal switch. 2) ***Replace*** the thermal switch.
P4 No voltage present. (See problem P7)	1) Short circuit present on the generator outputs.	1) ***Disconnect*** all outputs on the generator except for those on the condensers and re-start machine; check for voltage on condensers.
MOTOR PROBLEMS		
P1 The engine does not start or stops immediately after startup.	1) Low battery voltage, battery dead or defective. 2) Presence of air in the fuel supply circuit. 3) Engine protection fuse blown 4) Engine solenoid	1) Check the level of the electrolyte. Fill or replace the battery. 2) Carry out de-aeration on the fuel system. See engine operating manual. 3) Replace. In case the problem persists, check the electrical circuit and eliminate the problem. Call an authorised service centre. 4) See engine manual
P2 Engine stops due to intervention of EP1 / EP5.	1) Engine temperature too high or insufficient oil pressure. 2) High temperature sensor or oil pressure defective. 3) EP1 / EP5 protection defective.	1) ***Check*** oil level. 2) ***Replace*** the malfunctioning sensor. 3) ***Replace*** the protection.
P3 The battery is not charged.	1) Battery charger alternator defective. 2) Battery charger warning light defective.	1) ***Replace*** 2) ***Replace***
P4 For other problems, refer to the attached engine manual		

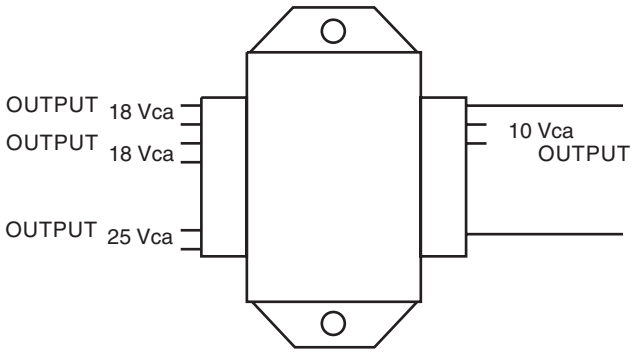

Check the transformer in this way:

input: 220 Vac
output: 18 Vac, 25 Vac, 10 Vac

DRAWING 1

CHECK THE CHOPPER FROM THE CONNECTOR

CHOPPER CONNECTOR
CHECK MOSFET ON CHOPPER

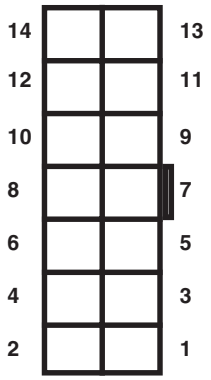

FOR THE CHECK HOLD THE CONNECTOR AS SHOWED ABOVE WITH A TESTER CHECK THERE ARE 3300 ohms from below inputs

input 1-2	KHM 400	KHM 2x400 KHM 600
input 3-4	KHM 400	KHM 2x400 KHM 600
input 5-6	KHM 400	KHM 2x400 KHM 600
input 7-8		KHM 2x400 KHM 600
input 9-10		KHM 2x400 KHM 600
input 11-12	(free)	
input 13-14	1,8 ÷ 2,5 KΩ	

DRAWING 2

Connector P4 on WDC

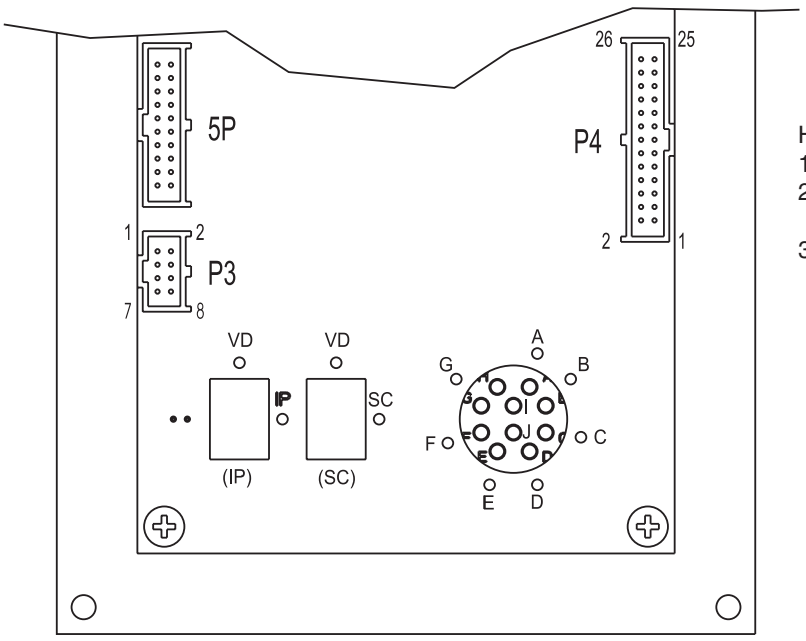

How to check the potentiometer put on WDC
1) Start the welding without load (at max RPM)
2) Take the voltage from pin 1 - pin 12 on connector P4
3)

Position Knob	Voltage from pin 1 - pin 4 on pin 4
Minimum	0 Vdc
Max	4,5 - 4,7 Vdc

DRAWING 3

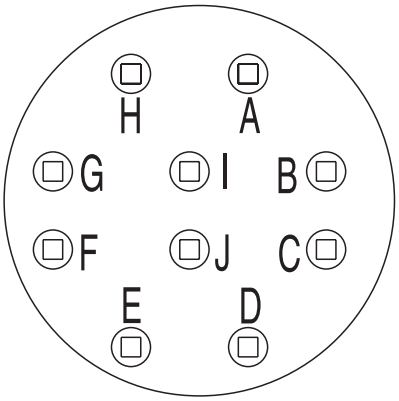

Put the knob on PHG1 / PHG1A at minimum/max, put one ohmmeter from pin A - B and measure the resistance.

Knob	Resistance
Minimum Max	50 ÷ 100 Ω 4,5 - 4,7 KΩ

DRAWING 4

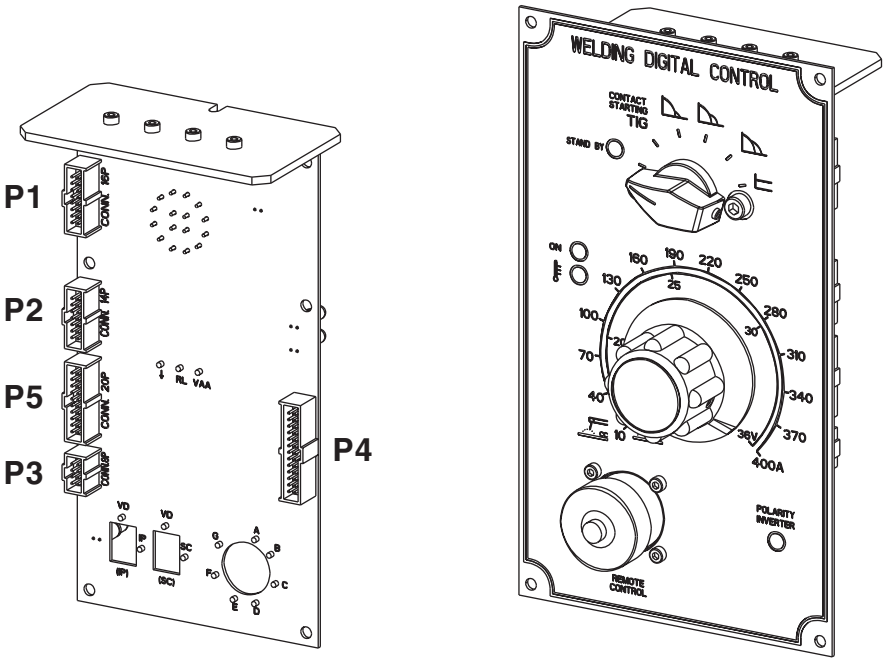

DRAWING 5

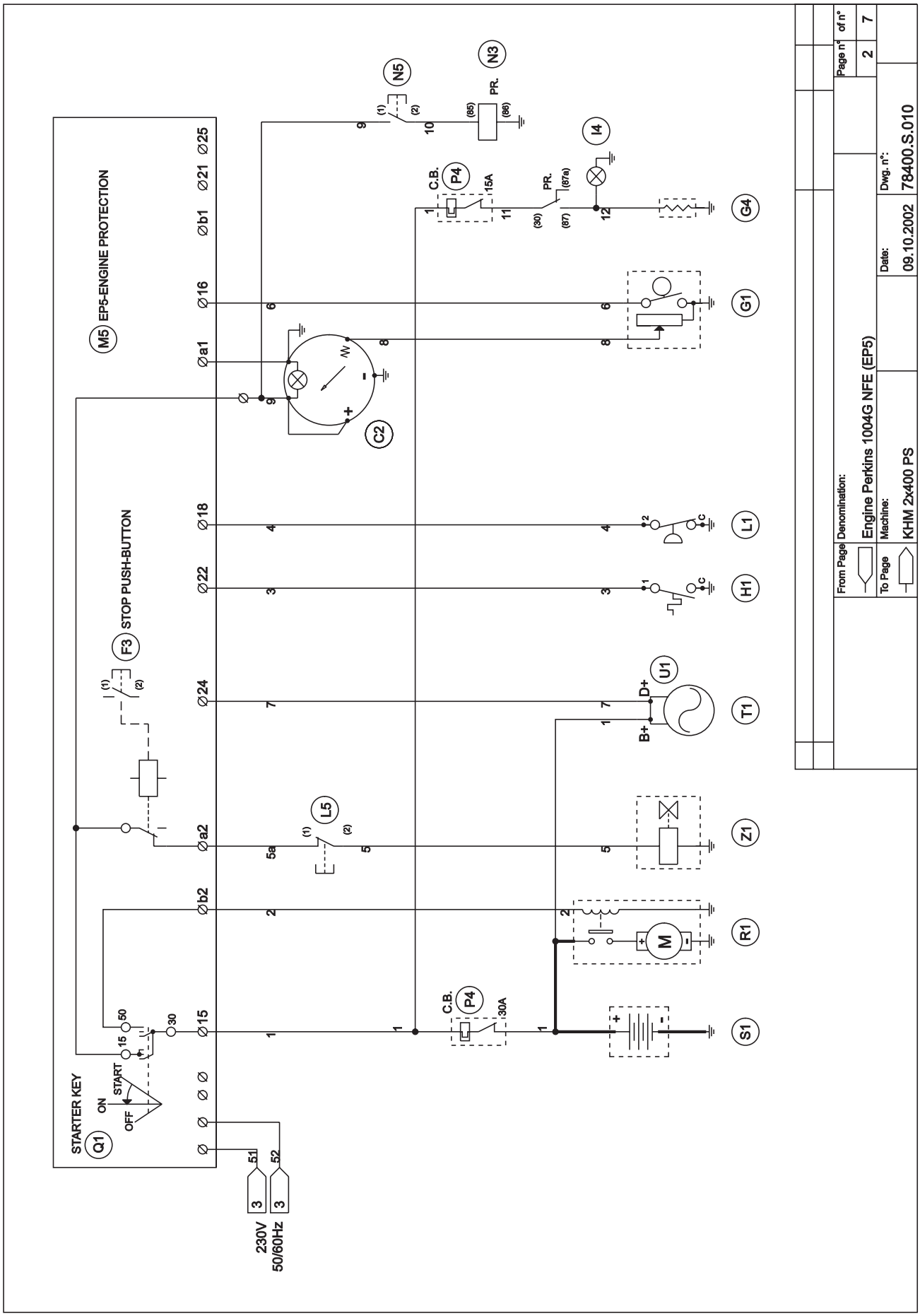
M5 EP5-ENGINE PROTECTION
F3 STOP PUSH-BUTTON
STARTER KEY
Q1
ON
START
OFF
50
15
30
51
52
230V
50/60Hz
Ø25
Ø21
Ø b1
Ø16
Ø a1
Ø18
Ø22
Ø24
Ø a2
Ø b2
Ø15
C2
N5
N3
PR.
C.B.
P4
15A
30A
I4
L5
U1
D+
B+
M
G4
G1
L1
H1
T1
Z1
R1
S1
From Page
To Page
Denomination:
Engine Perkins 1004G NFE (EP5)
Machine:
KHM 2x400 PS
Page n° of n°
2 7
Date:
09.10.2002
Dwg. n°:
78400.S.010

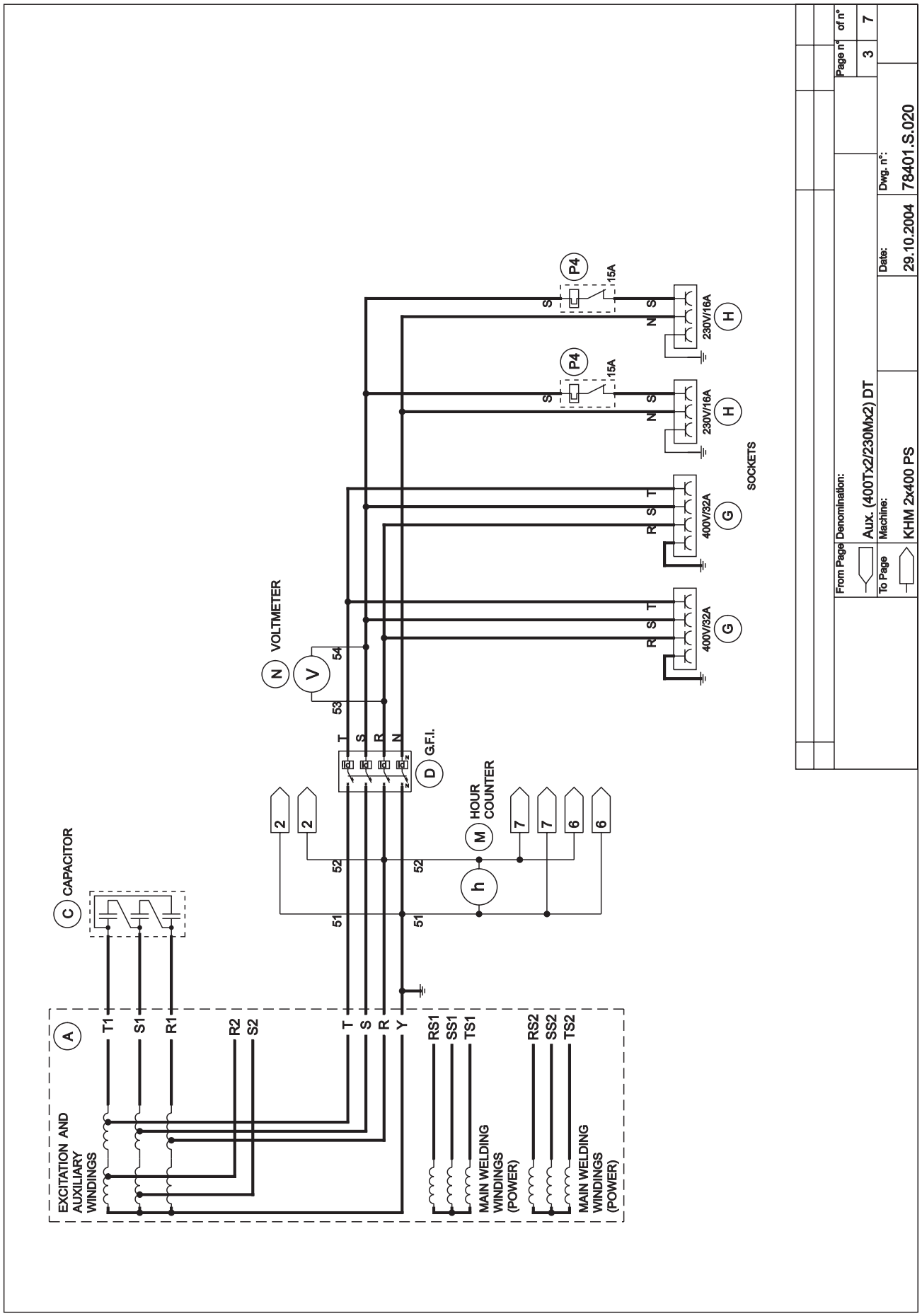
EXCITATION AND AUXILIARY WINDINGS
A
T1
S1
R1
R2
S2
T
S
R
Y
RS1
SS1
TS1
MAIN WELDING WINDINGS (POWER)
RS2
SS2
TS2
MAIN WELDING WINDINGS (POWER)
C CAPACITOR
51
52
53
54
2
2
D G.F.I.
T S R N
N VOLTMETER
V
M HOUR COUNTER
h
7
7
6
6
G 400V/32A
R S T
G 400V/32A
R S T
H 230V/16A
S N S
P4 15A
H 230V/16A
S N S
P4 15A
SOCKETS
From Page
To Page
Denomination:
Aux. (400Tx2/230Mx2) DT
Machine:
KHM 2x400 PS
Page n° of n°
3 7
Date:
29.10.2004
Dwg. n°:
78401.S.020

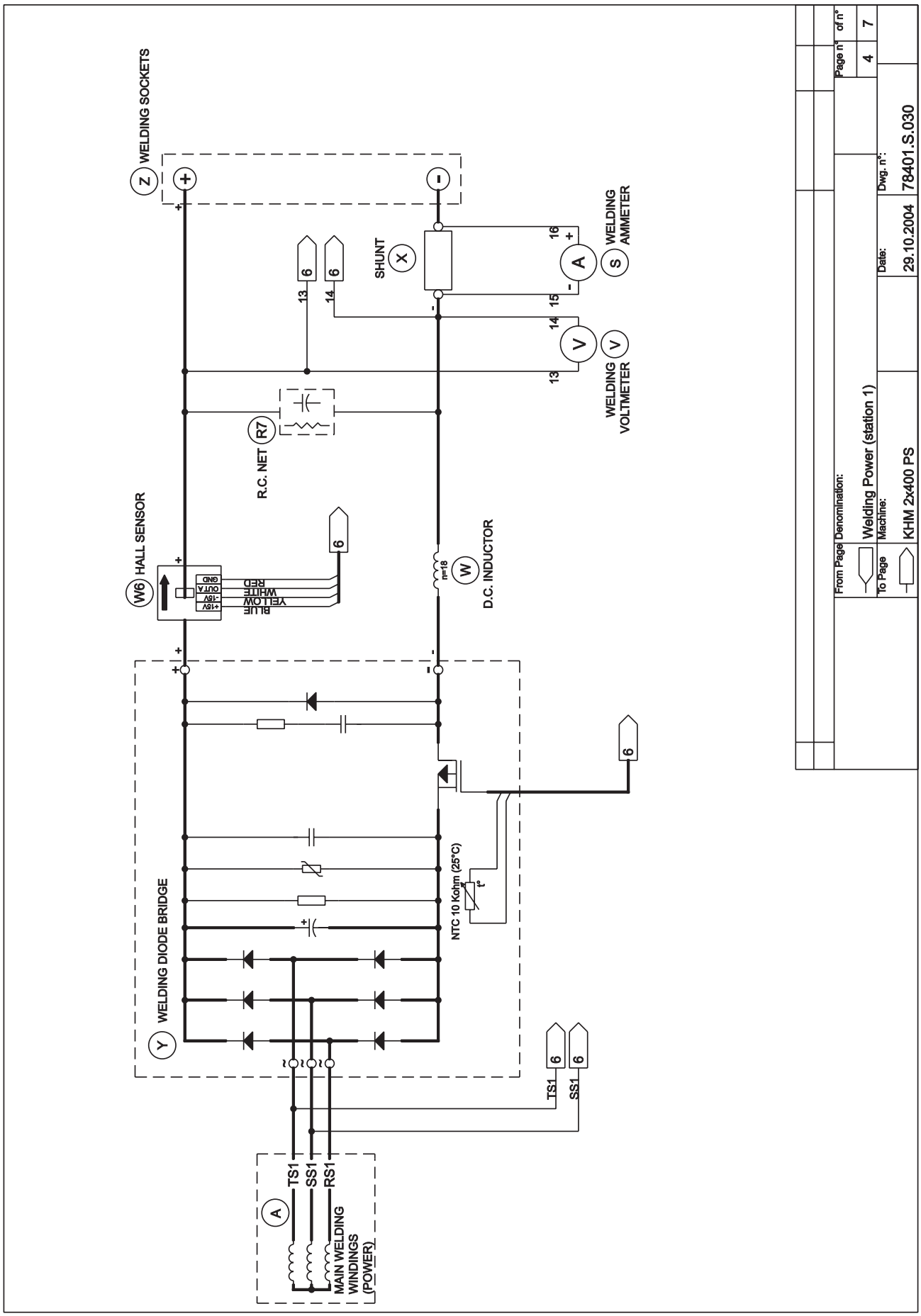
Z WELDING SOCKETS
SHUNT X
WELDING AMMETER S
WELDING VOLTMETER V
R.C. NET R7
W6 HALL SENSOR
+15V
-15V
OUT A
GND
BLUE
YELLOW
WHITE
RED
n=18
W D.C. INDUCTOR
NTC 10 Kohm (25°C)
Y WELDING DIODE BRIDGE
A
TS1
SS1
RS1
MAIN WELDING WINDINGS (POWER)
From Page
To Page
Denomination:
Welding Power (station 1)
Machine:
KHM 2x400 PS
Page n° of n°
4 7
Date:
29.10.2004
Dwg. n°:
78401.S.030

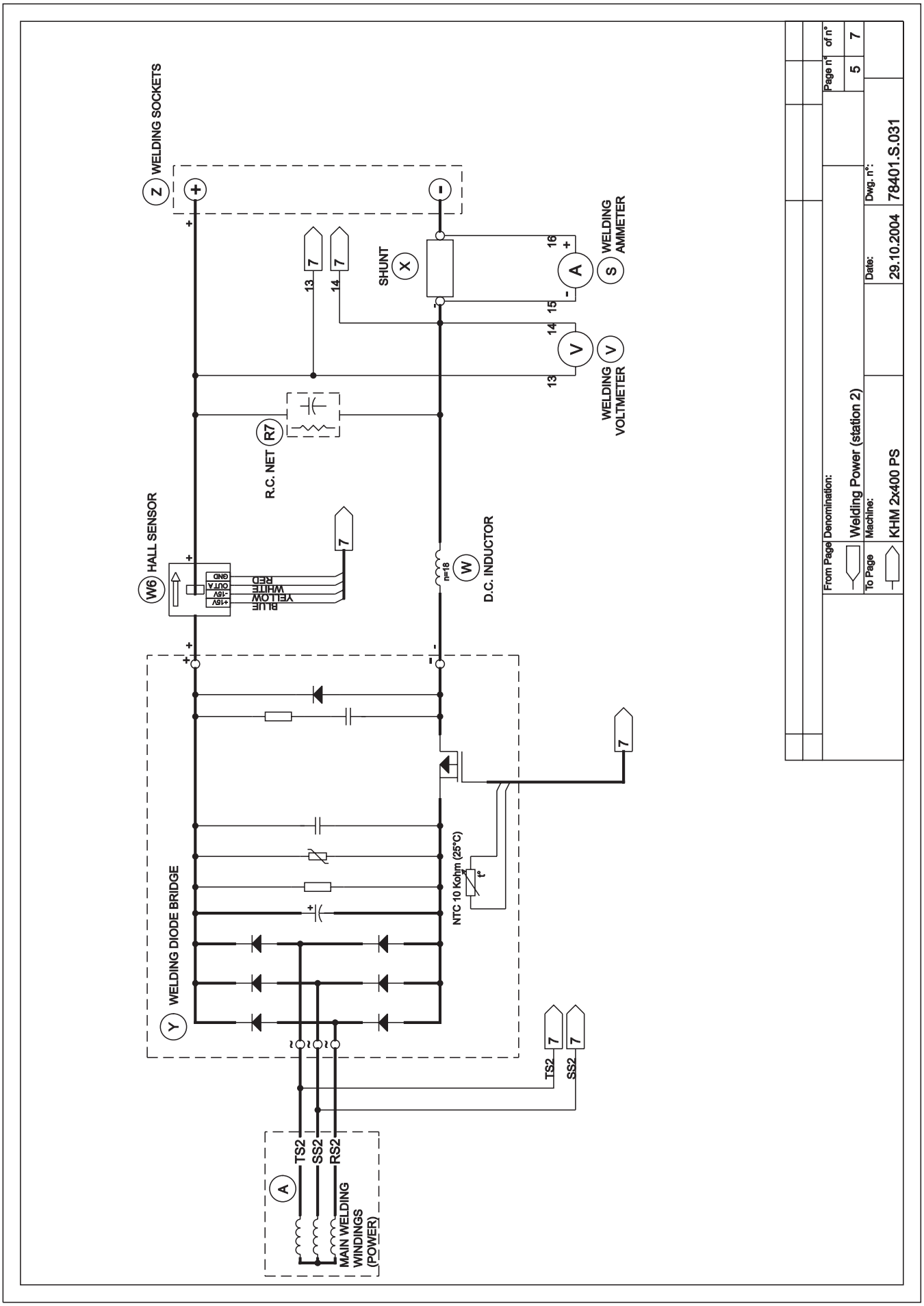
Z WELDING SOCKETS
SHUNT X
WELDING AMMETER S
WELDING VOLTMETER V
R.C. NET R7
W6 HALL SENSOR
+15V
-15V
OUT A
GND
BLUE
YELLOW
WHITE
RED
D.C. INDUCTOR W
n=18
NTC 10 Kohm (25°C)
WELDING DIODE BRIDGE Y
TS2
SS2
RS2
A MAIN WELDING WINDINGS (POWER)
From Page
Denomination:
Welding Power (station 2)
To Page
Machine:
KHM 2x400 PS
Page n° of n°
5 7
Date:
29.10.2004
Dwg. n°:
78401.S.031

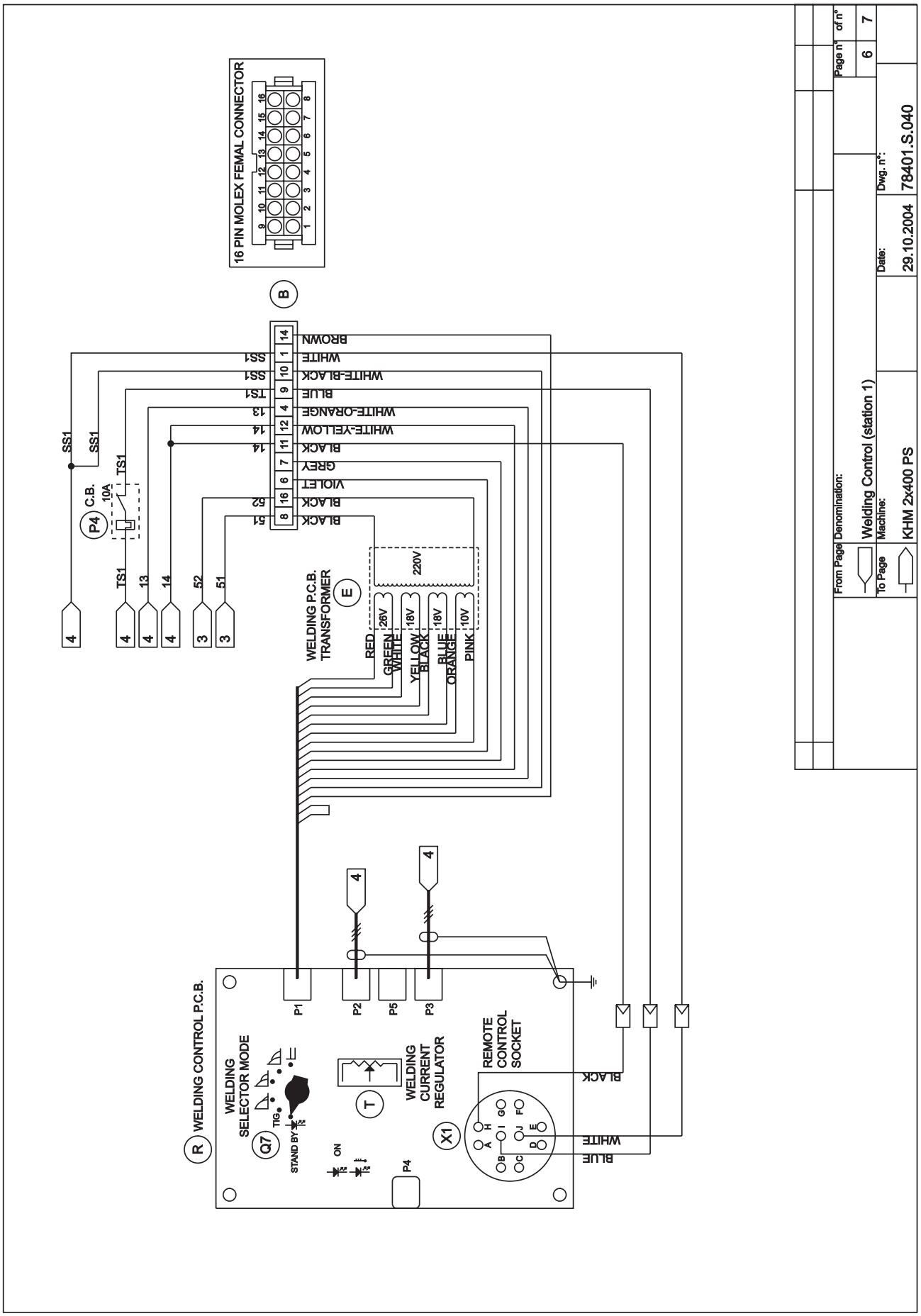
16 PIN MOLEX FEMAL CONNECTOR
B
BROWN
WHITE
SS1
WHITE-BLACK
SS1
BLUE
TS1
WHITE-ORANGE
13
WHITE-YELLOW
14
BLACK
14
GREY
VIOLET
BLACK
52
BLACK
51
SS1
SS1
TS1
C.B.
10A
P4
TS1
13
14
52
51
4
4
4
4
3
3
WELDING P.C.B.
TRANSFORMER
E
220V
RED
26V
GREEN
WHITE
18V
YELLOW
BLACK
18V
BLUE
ORANGE
10V
PINK
4
4
WELDING CONTROL P.C.B.
R
P1
P2
P5
P3
WELDING
SELECTOR MODE
Q7
TIG
STAND BY
ON
T
WELDING
CURRENT
REGULATOR
P4
REMOTE
CONTROL
SOCKET
X1
A
B
C
D
E
F
G
H
I
J
BLACK
WHITE
BLUE
Page n° of n°
6 7
From Page
To Page
Denomination:
Welding Control (station 1)
Machine:
KHM 2x400 PS
Date:
29.10.2004
Dwg. n°:
78401.S.040

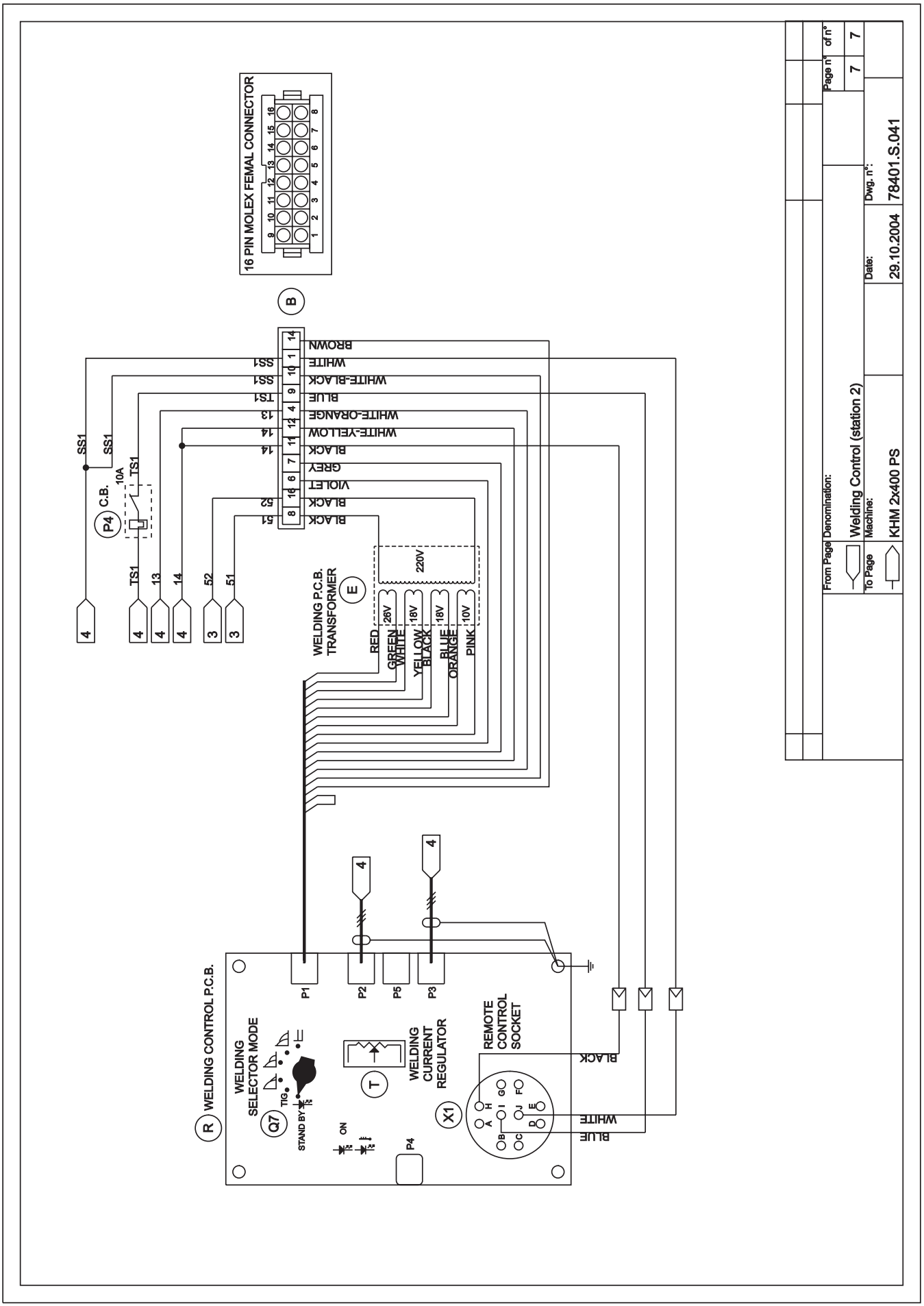
16 PIN MOLEX FEMAL CONNECTOR
B
BROWN
WHITE
WHITE-BLACK
BLUE
WHITE-ORANGE
WHITE-YELLOW
BLACK
GREY
VIOLET
BLACK
BLACK
SS1
SS1
TS1
13
14
52
51
SS1
SS1
C.B.
P4
10A
TS1
TS1
13
14
52
51
WELDING P.C.B. TRANSFORMER
E
220V
26V
18V
18V
10V
RED
GREEN
WHITE
YELLOW
BLACK
BLUE
ORANGE
PINK
WELDING CONTROL P.C.B.
R
WELDING SELECTOR MODE
Q7
TIG
STAND BY
ON
P1
P2
P5
P3
P4
WELDING CURRENT REGULATOR
T
REMOTE CONTROL SOCKET
X1
BLACK
WHITE
BLUE
From Page
Denomination:
Welding Control (station 2)
To Page
Machine:
KHM 2x400 PS
Page n° of n°
7 7
Date:
29.10.2004
Dwg. n°:
78401.S.041

A : Alternator
B : Wire connection unit
C : Capacitor
D : G.F.I. (ground fault interrupter)
E : Welding PCB transformer
G : 400V 3-phase socket
H : 230V 1phase socket
M : Hour-counter
N : Voltmeter
R : Welding control PCB
S : Welding current ammeter
T : Welding current regulator
V : Welding voltage voltmeter
Z : Welding sockets
X : Shunt
W : D.C. inductor
Y : Welding diode bridge
G1 : Fuel level transmitter
H1 : Oil or water thermostat
L1 : Oil pressure switch
Q1 : Starter key
R1 : Starter motor
S1 : Battery
T1 : Battery charge alternator
U1 : Battery charge voltage regulator
X1 : Remote control and/or wire feeder socket
Z1 : Solenoid valve
C2 : Fuel level gauge
F3 : Stop push-button
N3 : Relay
G4 : Preheating glow plugs
I4 : Preheating indicator
P4 : Circuit breaker
L5 : Emergency stop button
M5 : Engine protection EP5
N5 : Pre-heat push-button
W6 : Hall sensor
Q7 : Welding selector mode
R7 : R.C. net

GENERAL INFORMATION

- In the envelope where you found this manual you will also find an Owner's manual for the engine, and accessories (if required).

This product has been designed for welding and generation of electrical power for tools and other electrical devices used in construction; ANY OTHER USE, is not permitted and we cannot be held responsible for injuries or damages resulting from such incorrect use.

Our products are made in conformity with the safety norms in force in order to avoid injury to persons or damage to the machine or other things.

☞ **Warranty is not valid if not carried out by ESAB authorized service agent.**

Making modifications to the machine without our written authorization will void the warranty and release us from any liability.

ABOUT THIS MANUAL

Before using the machine please read this manual attentively and follow the instructions contained in it. This will help avoid problems, possible injury and damage to the machine.

The manual is written for experienced, qualified personnel, who are familiar with health and safety laws and related regulations.

This manual is an integral part of the product and should be kept in a safe place so that it will be available for consultation during the life of the product. If the machine is sold the manual should be transferred to the new owner.

Some figures contained in this manual are designed to help identify certain parts and may not correspond to the machine in your possession.

☞ ***Notice:*** *the manufacturer may make improvements or modifications to the product or its accessories as described in this manual without updating the manual.*

HEADINGS USED IN THIS MANUAL

The headings used in this manual are designed to call your attention to potential hazards and important aspects of the operation of the machine…

⚠ DANGEROUS

Indìcates a strong possíbility of severe personal injury or death ìf ínstructions are not followed.

⚠ WARNING

Indìcates a possibìlìty of personal ínjury or equipment damage if ìnstructions are not followed

⚠ CAUTION

Indícates that equipment or property damage can result if instructions are not followed.

⚠ IMPORTANT

⚠ NOTE

⚠ ATTENTION

These headings give helpful information about the preparation, operation and care of the machine.

GENERAL SYMBOLS

STOP – Read with great attention

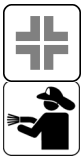

Read with attention

WRENCH - Use the correct tools for the type of work being done

WARNING SYMBOLS

ATTENTION - If this advice is not followed people or things can be hurt or damaged.

HIGH VOLTAGE - Do not touch – risk of injury or death.

FIRE - Risk of fire.

HEAT - Hot surfaces.

EXPLOSIVE - Explosive material or danger of explosion, in general.

NO WATER - *Do not use* water as it can cause shortcircuits or other damage.

NO SMOKING - Cigarettes, matches or lighters can start a fire or explosion.

ACIDS - Danger of corrosion or burns.

SAFETY SYMBOLS

Use the correct protective devices for the type of welding being done

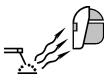

Use protective clothing, etc. specifically designed for the type of welding being done.

Protect yourself when doing maintenance on the machine -

It is advisable to protect yourself when carrying out maintenance, such as filling the battery, refuelling, etc.

Pay attention to safety precautions when moving the machine

Refer to the instructions before moving the machine

Wear indicated safety clothing -

It is compulsory to wear the personal protection items shown when using the equipment.

Use required safety devices -

Safety devices suitable for the type of welding and the location of the job must be used.

Do not use water on electrical fires -

It is prohibited to use water to put our fires in electrical equipment.

Do not touch without having disconnected the electricity -

It is prohibited to work on the machine until the electricity has been turned off.

Welding prohibited -

It is forbidden to weld in areas containing explosive gases.

⚠ IMPORTANT

☞ Read and understand these instructions.
☞ Before installing, operating or servicing this equipment, read the operating manuals of the welder and of the engine.
☞ Not observing the information in the manuals can result in personal injury and/or damage to the equipment and other property.
☞ Respect all safety regulations and laws when operting this equipment.

⚠ WARNING

Do not remove or disable protective devices

Removing or disabling protective devices on the machine is prohibited.

Do not use the machine if it is not in good technical condition

The machine must be in good working order before being used. Defects, especially those which. regard the safety of the machine, must be repaired before using the machine.

ENGINE FUELLING

⇒ Stop engine when fuelling.
⇒ Do not smoke, avoid open flames and sparks, and do not use electric tools when fueling.
⇒ Unscrew the fuel cap slowly to let out the fuel vapours.
⇒ Do not over-fill the tank.
⇒ Avoid spilling fuel on hot engine.
⇒ Wipe up spilled fuel before starting engine.
⇒ Shut off fuel cock, if present, or remove fuel from tank before moving machine

FOR BATTERY EQUIPPED UNITS ONLY

⇒ Sparks may cause the explosion of battery vapours

WATER COOLED ENGINES ONLY

⇒ Slowly unscrew the cooling liquid cap of a hot engine to allow vapours to escape.
⇒ Hot vapor and heated cooling liquid under pressure can burn face, eyes, skin.

☞ **FIRST AID.** In case the operator shold be sprayed by accident, from corrosive liquids a/o hot toxic gas or whatever event which may cause serious injuries or death, predispose the first aid in accordance with the ruling labour accident standards or of local instructions.

Skin contact	Wash with water and soap
Eyes contact	Irrigate with plenty of water, if the irritation persists contact a specialist
Ingestion	Do not induce vomit as to avoid the intake of vomit into the lungs, send for a doctor
Suction of liquids from lungs	If you suppose that vomit has entered the lungs (as in case of spontaneous vomit) take the subject to the hospital with the utmost urgency
Inhalation	In case of exposure to high concentration of vapours take immediately to a non polluted zone the person involved

☞ **FIRE PREVENTION.** In case the working zone,for whatsoever cause goes on fire with flames liable to cause severe wounds or death, follow the first aid as described by the ruling norms or local ones.

EXTINCTION MEANS	
Appropriated	Carbonate anhydride (or carbon dioxyde) powder, foam, nebulized water
Not to be used	Avoid the use of water jets
Other indications	Cover eventual shedding not on fire with foam or sand, use water jets to cool off the surfaces close to the fire
Particular protection	Wear an autorespiratory mask when heavy smoke is present
Useful warnings	Avoid, by appropriate means to have oil sprays over metallic hot surfaces or over electric contacts (switches,plugs,etc.). In case of oil sprinkling from pressure circuits, keep in mind that the inflamability point is very low.

⚠ WARNING

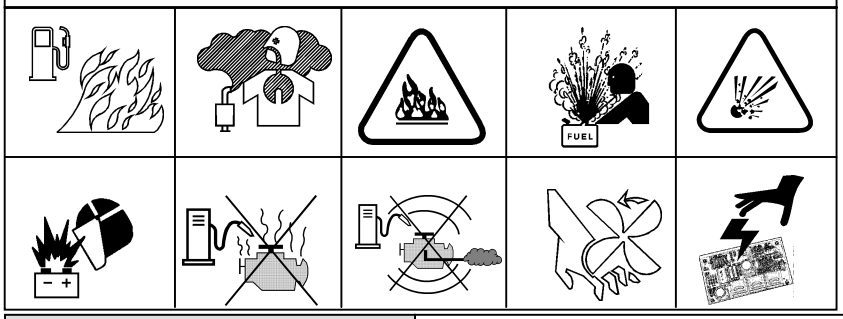

⚠ CAUTION

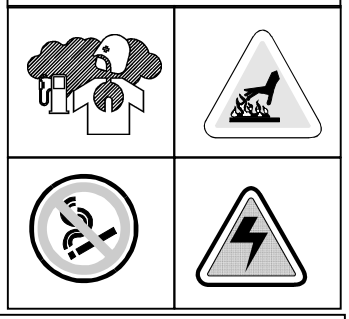

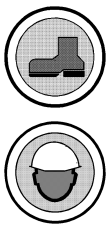

WARNING	***THE MACHINE <u>MUST NOT BE USED</u> IN AREAS WITH EXPLOSIVE ATMOSPHERE***